技术参数 Specifications

Model	项目	MPQ1060	MP1060	MPQ1050	MP1050
Max. Paper Size(mm)	最大输纸尺寸(mm)	1060X760	1060X760	1060X760	1060X760
Max. Die-cutting Size(mm)	最大模切尺寸(mm)	1050X750	1050X750	1050X750	1050X750
Min. Paper Size(mm)	最小输纸尺寸(mm)	400X370	400X370	400X370	400X370
Gripper Margin (mm)	空白叼口 (mm)	13±4	13±4	13±4	13±4
Inner Chase Size(mm)	板框内版尺寸(mm)	1120X788	1120X788	1120X788	1120X788
Paper Thickness	纸张厚度	80-2000gCorrugated Paper≤4mm	80-2000gCorrugated Paper≤4mm	80-2000gCorrugated Paper≤4mm	80-2000gCorrugated Paper≤4mm
Die-cutting Precision(mm)	模切精度(mm)	≤±0.1	≤±0.1	≤±0.1	≤±0.1
Max. Working Pressure(T)	最大工作压力(T)	300	300	300	300
Max. Die-cutting Speed s/h①	最大模切速度s/h①	7500	7500	7500	7500
Max. Stripping Speed s/h①	最高排废速度s/h①	6500	6500	6500	6500
Max. Feeding Pile mm	最大给纸堆高mm	1400	1400	1400	1400
Max. Delivery Pile mm	最大收纸堆高mm	1350	1350	1350	1350
Main Motor Power kw	主电机功率kw	11	11	11	11
Machine Weight （T）	机器总重t	19	19	18.5	18.5
High Speed Feeder	新式高速飞达头	●	●	●	●
Non-stop Feeding System	不停机给纸系统	●	●	●	●
Non-stop Delivery System	不停机收纸系统	●	●	●	●
High Performance Single Point Clutch	高性能单点离合器	●	●	●	●
Wider Conveyor Belt	宽幅输送皮带	○	○	○	○
Imported Torque Limiter	进口扭力限制器	●	●	○	○
Imported Worm and Gear	进口蜗轮、蜗杆	●	●	●	●
Fine Tuning System for Paper Feeding	给纸微调系统	●	●	●	●
Pneumatic Plate Locking Device	双向气动锁紧版框装置	●	●	●	●
Main Gripper Bar Chain with Belt Transmission System	主牙排链条齿形带传动系统	●	●	×	×
Each Gripper Bar with Precision Trimming System	每根牙排精度微调系统	●	●	●	●
Special Customized Widening Gripper Bar Chain	特殊定制牙排加宽型链条	●	●	×	×
7mm Steel Plate	7mm下垫板	×	×	●	●
5mm Steel Plate	5mm下垫板	●	●	×	×
Electric Pressure Regulating System	电动调压系统	●	●	●	●
Steel Plate Longitudinal and Lateral Micro-Adjusting System	钢板横纵向微调系统	●	●	×	×
Electric Front Lay Adjustment System	电动前规调整系统	●	●	●	●
Optical Fiber Front Lay Detection System	光纤前规检测系统	●	●	●	●
Optical Fiber Side Lay Detection System	光纤侧规检测系统	●	●	●	●
CE Standard	CE标准	●	●	●	●
Automatic Intermittent Centralized Lubrication System	自动间歇集中润滑系统	●	●	×	×
Pre-Loader Device	开门式小车预堆纸装置	●	●	●	●
Gantry Type Pre-Loader Device	龙门式小车预堆纸装置	○	○	○	○
Paper Electrostatic Elimination Device	纸张静电消除装置	○	○	○	○
Double Interface	双界面人机对话系统	●	●	○	○
Pneumatic Sampling Device	气动取样装置	●	●	●	●
Ultrasonic Double Sheet Detection Device	超声波双张检测装置	○	○	○	○
Side Blowing Device for Paper Pile	给纸堆侧吹风装置	●	●	●	●
Blow Fan for Paper Delivery	收纸后吹分装置	●	●	●	●
Pneumatic Clutch	气动离合器	●	●	●	●
Secondary Waste Stripping Device	二次清废装置	●	×	●	×

注：
①模切速度受产品纸张质量、排版等因素影响。
②：●标配 ○选配 ×无

PS：
③Die-cutting speed is affected by paper quality, typesetting and other factors
④●Standard ○Optional ×None

MPQ1060/MP1060地基示意图

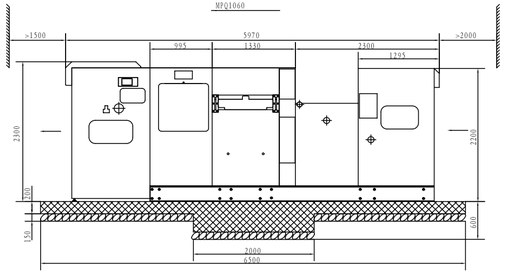

MPQ1060/MP1060平面示意图

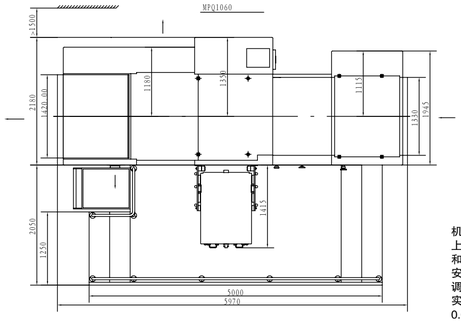

机器应安装在混凝土的地基上，并留出合适的操作维修和保养机器的空间。
安装机床时要将模切部分调成水平，并用薄铁板垫实。水平仪的精度等级为：0.05mm或0.1mm。

销售热线电话:18732560691

河北玉田兴业印刷机械有限公司
原唐山玉印印刷机械有限公司
地址：河北省玉田县无终西街1166号
电话：0315-6163591 / 7679008
传真：0315-6166314 / 7679007
网址：www.china-yuyin.com
邮箱：info@china-yuyin.com

HEBEI YUTIAN XINGYE PRINTING MACHINERY CO., LTD.
TANGSHAN YUYIN PRINTING MACHINERY CO., LTD.
Add：NO.1166 Wuzhong West Street, Yutian, Hebei, China
Tel：0086-315-6163591 / 7679008
Fax：0086-315-6166314 / 7679007
Web：www.china-yuyin.com
E-mail：info@china-yuyin.com

上海玉印国际贸易有限公司
SHANGHAIYUYIN INTERNATIONAL TRADING CO.,LTD.
Postal Add:room 2403 Jincheng Mansion 511 Tianmu Xi Road. Shanghai 200070.P.r.china
Tel:(0086)021-63536567 63537129 63537130 63173900 63530603
Fax:(0086)021-63538343
Web：www.shanghai-yuyin.com

由于技术改良，制造商保留权利修改有关参数及功能，恕不另行通知。
In the interest of product improvement the manufacturer reserves the right to change specifications and features without notice.



MPQ1060/MP1060
MPQ1050/MP1050

自动全清废模切机/全自动排废模切机

AUTOMATIC DIECUTTING & STRIPPING MACHINE

河北玉田兴业印刷机械有限公司
（原唐山玉印印刷机械有限公司）

YU YIN



MPQ1060/MP1060
MPQ1050/MP1050

自动全清废模切机/全自动排废模切机

AUTOMATIC DIECUTTING & STRIPPING MACHINE

主要用途和特点 Main use and Features

MPQ1060自动全清废模切机具有自动清废模切机功能外，又增加了二次排废系统，它能在模切生产的同时，排除其所有与包装盒无关的废屑和废边（含叼口），大大提高了生产效度，尤其适用于复杂的纸盒烟包的自动模切清废，使纸盒生产达到了合理化。

MP1060自动清废模切机排除其所有（除叼纸边外）与包装盒无关的废屑和废边。

Our new model of MPQ1060 not only has the traditional functions---the automatic stripping and the die-cutting, but also owns the new function --the second-stripping system, which can clean up all litters and wasteful edges (including the gripper mouth)around the package box while die-cutting, especially suitable for complicated cigarette-package . This new second-stripping system can height efficiency to rationalize the production for the package box.

The MP1060 automatic stripping and die-cutting machine can eliminate all litters and wasteful edges(except the gripper edge) around the package box.

技术特点 Features

- 具有二次清废系统，它能在模切清废生产的同时，排除其所有与包装盒叼口废边。
- 清废框电动提升，装有中心定位装置，操作容易，极大缩短准备时间。
- 清废系统采用三框联动结构清废动作更加合理。解决了排废过程中高速及散版的问题。
- 独特叼口分离系统使废边分离更加准确可靠，并方便模切和全清废功能转化。
- 专业厂商生产的高精度间歇机构，保证机器运转平稳。
- 采用大型号牙排链条抗拉强度增大了90%，使设备精度更加持久。

- The second-stripping system is able to clean up all wasteful edges on the gripper-mouth around the package box while die-cutting.
- It is easy to operate it because the stripping frame can be lifted electricly and it also has the center-positioning system to shorten the preparation time largely.
- The stripping system adopts three-frame linkage structure to make stripping much more rational and meanwhile, it solves problems for the high-speed and loosen-version during the stripping.
- The unique gripper-mouth separation-system makes the wasteful edge separate effectively and is also convenient for shifting between the die-cutting and stripping.
- The high-precision cam structure guarantees the machine to run stably and smoothly, which is produced by the professional manufacturer.
- Adopting the larger model of gripper chain increases 90% tensile strength to make the machine's continuous precision.

细部特征 Detail characteristics

● 安全系统 Safety system

整机通过德国莱恩公司CE安全认证，配备高档电路安全模块，达到四级安全防护等级。采用先进算法，执行速度快，工作稳定。

The machine with four degree safety class has got CE certificate of high-speed and stable performance.

● 电器部 Electrical unit

采用进口电器元件、人性化按钮板布局，操作更加方便。

配有恒温装置使电器元件工作更加可靠，延长使用寿命。

Imported electronic elements and panels with humanization control layout to ensure easy operation.

Equipped constant Temperature Devices to ensure reliable working and prolong service life.

● 给纸部 Feeding unit

飞达递纸采用平动机构设计，高速递纸更加平稳可靠。飞达头防撞装置。采用强力型四吸四送高速飞达。吸纸头可配合纸张的变形情况调整各个吸嘴角度，保证送纸稳定顺畅。新增侧散风功能保证高速递纸可靠。

Parallel move mechanism adopted ensures more reliable and steadier paper transfer at high speed. Feeder with collision-prevention device. Adopt high-speed feeder with adjustable strong type suckers to guarantee stable and smooth paper feeding. Newly added ventilated function guarantees reliable high-speed paper transfer.

● 活动平台 Movable Platform

活动平台采用独特的铸造结构和特殊加工工艺保证平整度和平面度，缩短压力调整时间；增加润滑油冷却系统保证压力恒定；改进型电动压力调整系统使其压力调整更加快捷方便；压力调整只需输入数值便可完成操作。

Unique cast structure and specific working process ensure evenness and flatness and pressure-regulating time. Oil cooling system ensures constant pressure. Electrically pressure-regulating system ensures convenient and efficient regulating. Pressure-regulating can be achieved only by entering value.

● 模切部 Diecutting unit

蜗轮、蜗杆、曲轴采用本公司独特加工工艺，大大提高设备核心部件使用寿命；气动锁版系统使其操作方便；单根牙排定位可做前后微调补偿，达到产品加工要求。

Worm shaft, worm wheel and crankshaft with unique working process greatly improve the service life of core components. Single gripper bar can be fine adjusted to achieve processing requirement.

● 气动离合器 Pneumatic clutch

采用进口器件，降低噪声，减少气动冲击；采用进口气动控制器件运行更加可靠，安全。

Imported components to lower noise and pneumatic impact for stable and safe running.

● 前规定位系统 Front Lay

前规定位可四点单独微调以适合不同纸张加工要求；独特电动调整装置在收纸部可实现调版，使前规调整更加快捷准确；人机界面直接显示数值使操作更加直观。

The front lay can be individually adjusted by four site for different paper processing requirement. Unique electrically pressure-regulating device realizes palte regulating in delivery unit, ensuring convenient and efficient front lay regulating. Values visually displayed on man-machine interface.

● 清废部 Stripping Unit

三框联动清废装置，动作协调，精度准确；上、中、下清废框采用中心定位结构，操作方便；采用电动控制提升装置，使对版更加方便；优化凸轮曲线使其高速清废更加平稳可靠。

Three-frame linkage structure cooperate coordinately with accurate precision. Three frames located in the upper, the middle and the lower adopt the center-positioning system to operate easily. Adopting electric control lifting system makes the plate rectify much more convenient.

● 收纸部 Delivering unit

收纸部增加防压脚装置设备更加安全；独特的纸张减速毛刷设计，纸张停止更加平稳；牙排传动链条浮动涨紧装置，延长链条使用寿命；气动取样装置，方便开机过程中随时查看样张。

Add foot-pressing preventer for further safety. Unique deceleration hairbrush ensures paper stopping stably. Tension device for drive chain of gripper bar prolongs the gripper bar's service life. Pneumatic sampling device for convenient sampling at any time with the machine running.

● 输送部 Feeding unit

输纸部采用链条传动，运行平稳，送纸相对稳定可靠；采用气弹簧辅助助力使其操作更加方便；可调整纸边到前规减速装置，更有利于高速薄纸定位；侧定位采用推、拉两用侧规装置，切换方便。

Drive chain adopted in feeding unit to ensure stable run and reliable paper feeding. Gas spring for easy and convenient operation. Adjustable reduction unit for paper to front lay, helps to thinner paper positioning at high speed. Side lay with dual purpose for side positioning can be easily switched.

● 牙排、链条 Gripper bar chain

牙排采用特殊结构和材料，转动惯量低，冲击小；特殊叼纸牙结构，叼纸更加有力牢靠，在高速下保证良好加工精度；采用优化牙排运动轨迹和改进型运行曲线使其牙排运行更加平稳，准确；采用进口大型号牙排链条抗拉强度增大了90%，使设备精度更加持久。

The gripper bar uses special structure and materials, rotating in lower inertness. The unique gripper structure transfers the paper powerfully and strongly to guarantee good production precision under high-speed running. Adopting optimizing motion-trail and the improved motion-curve make gripper-bar run much more stably. Meanwhile,the larger model of gripper chain increases 90% tensile strength to make the machine's continuous precision.

● 二次清废系统

独特叼口分离系统使废边分离更加准确可靠，并方便模切和全清废功能转化。传送带式废边导出装置使其废边导出更给可靠。（MP1060除外）。

The unique gripper-mouth separation-system makes the wasteful edge separate effectively and is also convenient for shifting between the die-cutting and stripping. The convey-belt design of waste-output device make the wasteful edge output much more reliably.(except the MP1060)

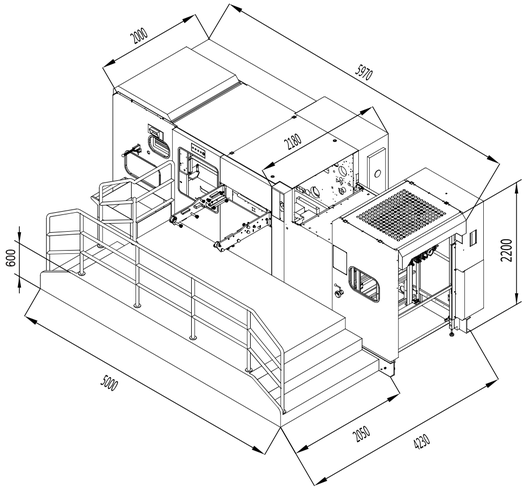

MPQ1060/MP1060立体示意图

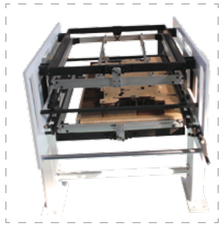

选配 Optional

清废预装台

Pre-loading platform for stripping